^ Z/Wd/KEW

7KH -67 +) WUDFN LV VXLWDEOH IRU JHQHUDO SXUSRVH $
VZLWFKLQJ ,W FDQ EH XVHG LQ DSSOLFDWLRQV VXFK DV PRWRU
DSSOLFDWLRQV VHFXUHG DW KRQH LQ GXFWLRQ PRWRU
VWDUWLQJ FLUFXLWV IRU SKDVH FRQWURO RSHUDWLRQ LQ
PRWRU VSHHG FRQWUROOHUV &RPSDUHG WR WUDGLWLRQD
-67 +) SURYLGHV D YHU\ KLJK VZLWFKLQJ FDSDELOLW\ XS
MXQFWLRQ WHPSHUDWXUHV RQ H[WHUQDO SODVWLF
SDFNDJH -67 +) SDUWLFLGHV GLVVLSDWLRQ YROWDJH RI
9506 FRPSO\LQJ WKURXJKRXW)LOH UHI (
3DFNDJH 72) LV 5R+6 FRPSOLDQW

D /E & dhZ ^

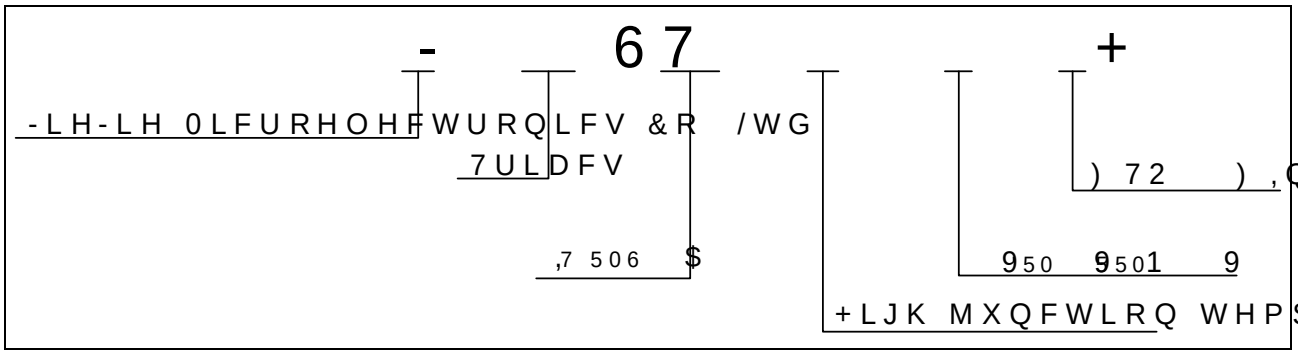
6\PERO	9DOXH	8QLW
,7 506		$
9'50 9$50		9
,*7		P$

^K>hd D y/DhD Z d/E'^

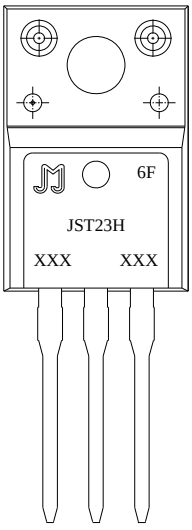
3DUDPHWHU	6\PERO	9DOXH		8QL
6WRUDJH MXQFWLRQ WHPSHUDWXUH RQ WHUPLQDO	VWJ	7		
2SHUDWLQJ MXQFWLRQ WHPSHUDWXUH	UDQJH	7		
5HSHWLWLYH SHDN RII VWDWH YROWDJH	9$50	7	9	
5HSHWLWLYH SHDN UHYHUVH YROWDJH	9506	7	9	
506 RQ VWDWH &XUUHQW	7 ,7 506		$	
1RQ UHSHWLWLYH VXUJH SHDN RQ VWDWH FXUUHQW IXOO F\FOH	,760		$	
1RQ UHSHWLWLYH VXUJH SHDN RQ VWDWH FXUUHQW IXOO F\FOH				
,W YDOXH IRU PXOWLQJ W	,W		$ V	
&ULWLFDO UDWH RI ULVH RI RII VWDWH FXUUHQW ;h,*7 I +] 7	G,GW		$ V	
3HDN JDWH FXUUHQW W	,*0		$	

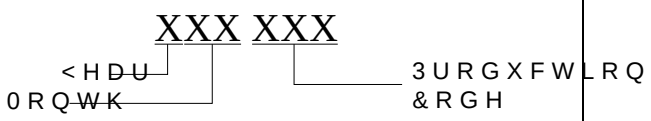
$YHUDJH JDWH SRZHU GLVVLSDWLRQ 7			
3HDN JDWH SRZHU			:
3HDN SXOVH YROWDJH 7 QRQ UHSHWLWLYH RII VWDWH),*			

KZ Z/E' /E&KZD d/KE

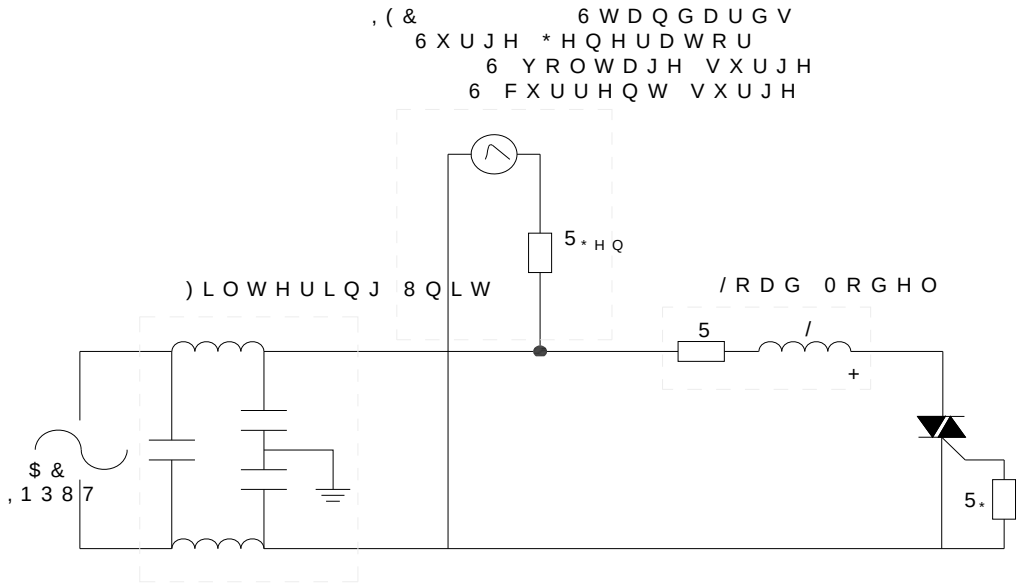


D Z</E'





),* Ö7HVW FLUFXLW IRU LQGXFWLYH DQG VWDQGDUG OR



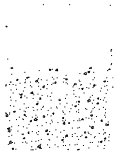
KZ Z/E' /E&KZD d/KE

2UGHU FF	9ROWD 9 50 9 550 9	,*7 0D	3DFNDJH	%DVH T SFV	'HOLYHU\ PRGH
-67 +)			72),QV		7XEH

'RFXPHQW 5HYLVLRQ +LVWRU\

'DWH	5HYLVLRQ	&KDQJHV
$SU	$	/DVW XSGDWHG
2FW	$	5HYLVHG.$*(0(&+$1,&$/ '$7$

W < ' D , E/ > d



,QIRUPDWLRQ IXUQLVKHG LQ WKLV GRFXPHQW LV EHOLHYHG WR EH DFFXUDWH +
-LDQJVX -LH-LH 0LFURHOHFWURQLFV &RRS\ULJKW -LH-LH 0LFURHOHFWURQLFV &R/WG DOO UHVSRQVLELOLWLHV RI XVH ZLWKRXW FRQVLGHUDWLRQ IRU SXEOLFDWLRQ RI LQFOXVLRQ LQ WKLV GRFXPHQW LV VXEMHFW WR PRGLILFDWLRQ ZLWKRXW QRWLFH
VLJQHG -LDQJVX -LH-LH 0LFURHOHFWURQLFV &R/WG
3URGXFWV DQG LQIRUPDWLRQ SURYLGHG LQ WKLV GRFXPHQW
-LDQJVX -LH-LH DVVXPHV QR UHVSRQVLELOLWLHV IRU WKLUG SDUW\ SDWHQWV RU RWKHU
SDUWLHV ZKLFK PD\ UHVXOW IURP WKHLU XVH 7KH IXUQLVKLQJ RI VXFK LQIRUPDWLRQ
VXSHUVHGHV DQG UHSODFHV DOO LQIRUPDWLRQ SUHYLRXV
LV D UHJLVWHUHG WUDGHPDUN RI -LH-LH 0LFURHOHFWURQLFV &R/WG
&RS\ULJKW -LH-LH 0LFURHOHFWURQLFV &R/WG $OO ULJKWV UHVH