^ Z/Wd/KEW

7KH 7 +) WUDF LV VXLWDEOH IRU JHQHUDO SXUSRVH $
VZLWFKLQJ ,W FDQ EH XVHG LQ
DSSOLFDWLRQV VXFK DV WKH FRQWURO RI GXW\ FUFOH PRWRU
VWDUWLQJ FLUFXLWV IRU SKDVH FRQWURO RSHUDWLRQ LQ
PRWRU VSHHG FRQWUROOHUV &RPSDUHG WR WUDGLWLRQD
7 +) SURYLGHV D YHU\ KLJK VZLWFKLQJ FDSDELOLW\ XS
MXQFWLRQ WHPSHUDWXUHV DQG H[WHUQDO SODVWLF
SDFNDJH 7 +) SURYLGHV D UDWHG LQVXODWLRQ YROWD
9506 FRPSO\LQJ WKURXJKRXW)LOH UHI (
3DFNDJH 72) LV 5R+6 FRPSOLDQW

D /E & dhZ ^

6\PERO	9DOXH	8QLW
,7 506		
9'50 9$50		9
,*7		P$

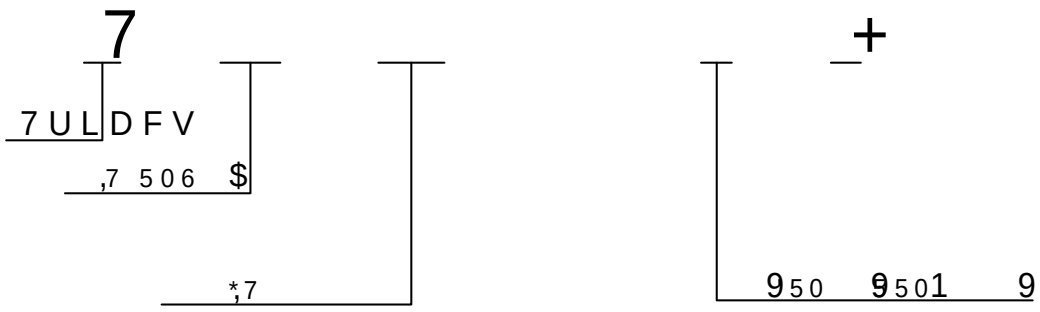
$

^K>hd D y/DhD Z d/E'^

3DUDPHWHU	6\PERO	9DOXH		8QL
6WRUDJH MXQFWLRQ WHPSHUDWXUH RSHUDWLQJ	VWJ	7		
2SHUDWLQJ WHPSHUDWXUH UDQJH	UDQJH	7		
5HSHWLWLYH SHDN RII VWDWH YROWDJH	7		9	
5HSHWLWLYH SHDN UHYHUVH YROWDJH	7		9	
506 RQ VWDWH &XUUHQW	7, 506			$
1RQ UHSHWLWLYH VXUJH SHDN RQ VWDWH FXUUHQW IXOO F\FOH PD[	,760		$	
1RQ UHSHWLWLYH VXUJH SHDN RQ VWDWH FXUUHQW IXOO F\FOH PV				
,W YDOXH IRU PXOWLQJ W	,W		$ V	
&ULWLFDO UDWH RI ULVH RI RII VWDWH FXUUHQW ; h,*7 I +] 7	G, GW		$ V	
3HDN JDWH FXUUHQW W	;0		$	

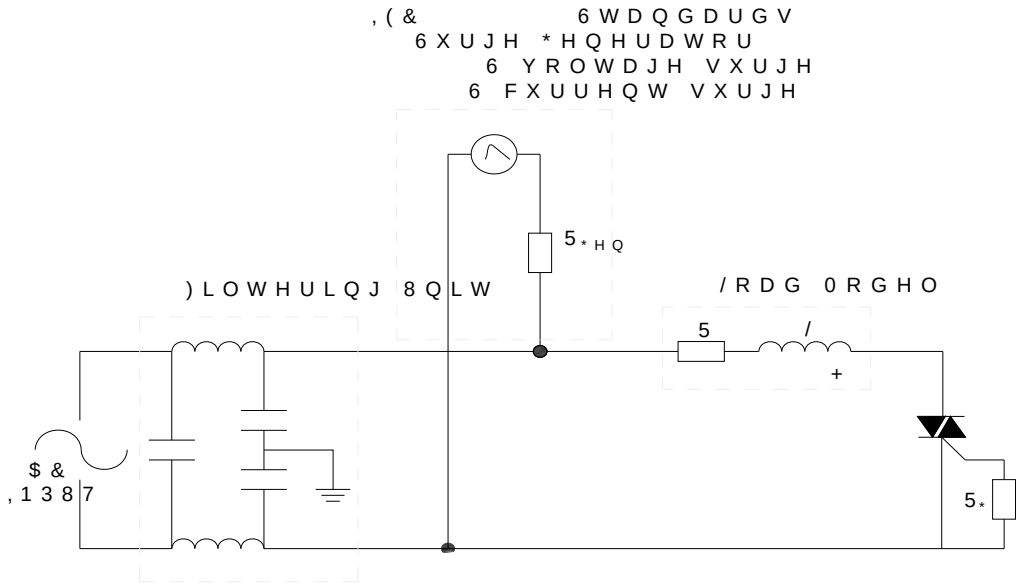
$YHUDJH JDWH SRZHU GLVVLSDWLRQ 7

KZ Z/E' /E&KZD d/KE



),* 0D[LPXP SRZHU GLVVLSDWLRQ)Y*HU5VXV5RQ6VWDWH FXUUHQW YHU
RQ VWDWH FXUUHQW WHPSHUDWXUH

), * Ö7HVW FLUFXLW IRU LQGXFWLYH DQG VWDQGDUGV OR



KZ Z/E' /E&KZD d/KE

2UGHU FF	9ROWDJH 9'50 9550 9	,*7 P$	3DFNDJH	%DVH T SFV	'HOLYHU\

7 +) -LH-LH 0LFURHOHFWURQL

,QIRUPDWLRQ IXUQLVKHG LQ WKLV GRFXPHQW LV EHOLHYHG WR EH DFFXUDWH +
-LDQJVX -LH-LH 0LFURHOHFWURQLFV &RO/WG WDUJHWV FXVWRPHU VSHFLILF VROXWLRQV
RI XVH ZLWKRXW FRQVLGHUDWLRQ IRU LVVXH RU PDQXIDFWXULQJ RI
LQ WKLV GRFXPHQW LV VXEMHFW WR FKDQJH ZLWKRXW QRWLFH
VLJQHG -LDQJVX -LH-LH 0LFURHOHFWURQLFV &RO/WG DJUHHPHQW
3URGXFWV DQG LQIRUPDWLRQ SURYLGHG LQ WKLV GRFXPHQW
-LDQJVX -LH-LH DVVXPH QR UHVSRQVLELOLWLHV IRU WKLUG SDUW\
SDUWLHV ZKLFK PD\ UHVXOW IURP WKH PLVXVH RI 7KH FLKV SURGXFWV
VXSHUVHGHV DQG UHSODFHV DOO LQIRUPDWLRQ SUHYLRXV
LV D UHJLVWHUHG WUDGHPDUN RI -LDQJVX -LH-LH 0LFURHOHFWURQLFV &
&RS\ULJKW -LDQJVX -LH-LH 0LFURHOHFWURQLFV &RO/WG $OO ULJKWV UHVL